Koalastudios™

TOP DRAWER DELIVERY PLUS

Master Assembly Instructions

Items Required

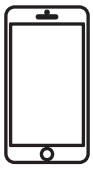

Phone

Shoe covers

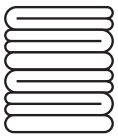

Blankets

Furniture Straps

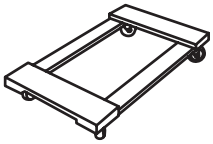

Furniture Dollies

Koala Hardware Packet

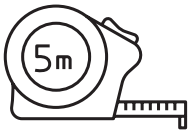

Tape Measure

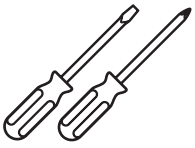

Screwdrivers

1/2" Open-End Wrench

Koala's Top Drawer Delivery In-Home Service Requirements

Please read the following instructions to ensure the smoothest possible delivery and installation process.

Checklist

☐ Prior to removing plastic wrap and or removal of boxes, insure no damage has been caused in transit. Look over the complete unit. You can reject delivery at this point. Are there damages? Please specify: _____

_____

_____

☐ Furniture appearance is acceptable.

☐ Are there missing components? Please specify: _____

_____

_____

☐ List any delivery obstacles: _____

_____

☐ Remove skid and discard packaging.

☐ Other: _____

☐ Other: _____

Delivery Complete

_____

Delivery Person Signature Date

_____

Delivery Person Signature Date

Consumer Agreement

_____

I agree that my furniture was delivered and assembled to my satisfaction.
Consumer Signature Date

Unpacking the Koala Studio

Refer to Top Accessory Box and locate the Assembly Instructions.

Pull out and review Assembly Instructions before opening the pack.

1

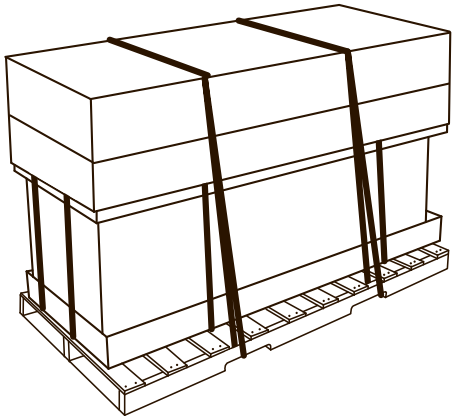

<u>At delivery site/truck</u>: Cut outer bands securing pack to pallet using safety knife or box cutter. Carefully cut stretch wrap and peel away wrap.
Note: Be careful not to cut inner bands.

2

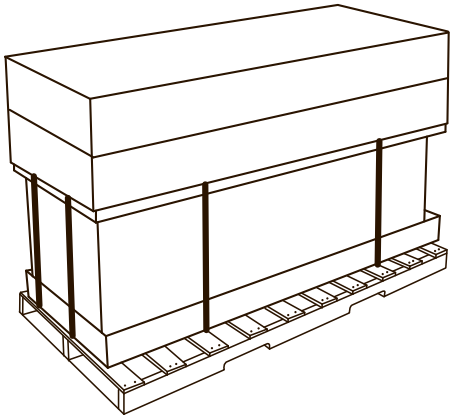

Move individual boxes to assembly site.
Note: Number of boxes varies depending on furniture options.

3

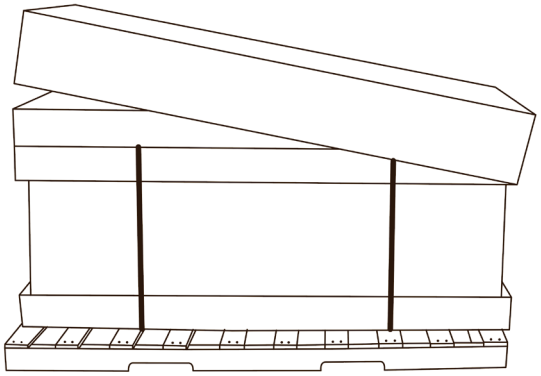

<u>At delivery site/truck</u>:
Remove top carton lid of carton accessory tray.

4

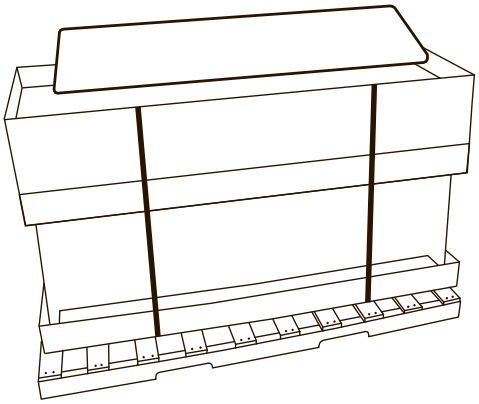

<u>At delivery site/truck</u>:
Remove top lid. Carry in accessory items separately to assembly site. **Note: Accessory items are individually wrapped in foam sheets.**

5

Two people are required.

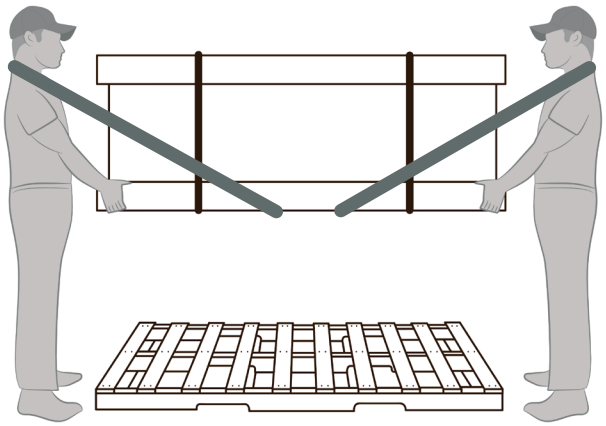

<u>At delivery site/truck</u>:
Lift packaged cabinet off skid and carry to assembly site. We recommend using furniture straps and dollies.

Drawer Removal

OPTIONAL STEPS: Remove drawers before attaching casters to lighten the base unit weight

Note: to remove drawer, squeeze handle levers (2) located on underside of drawer and lift

1a

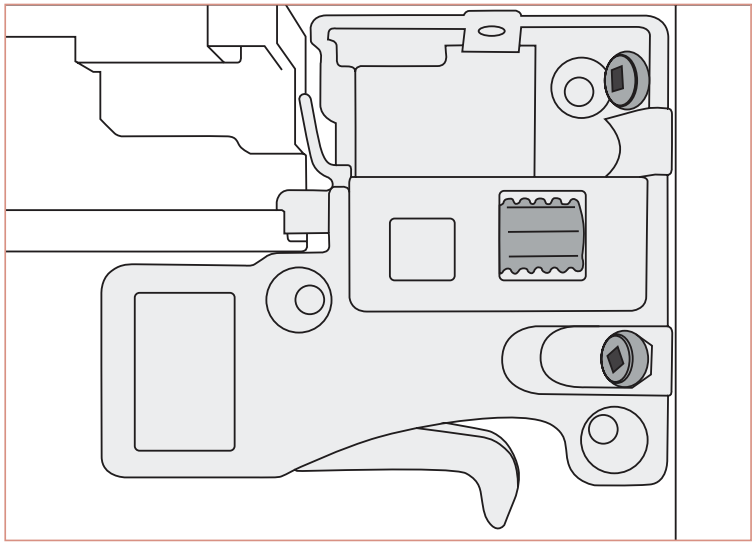

1b

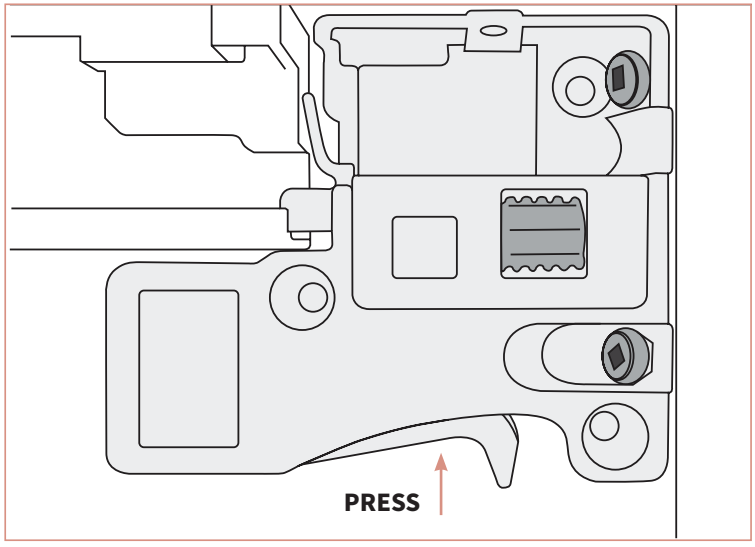

Studio Base Assembly

2

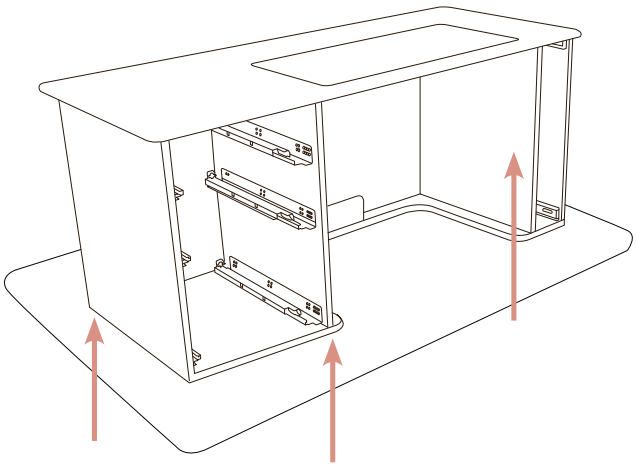

3

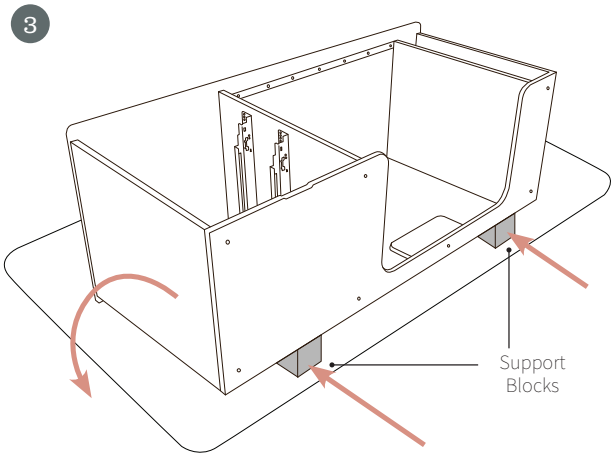

Before laying studio on the back side, **PLACE A BLANKET ON THE FLOOR AND PLACE INCLUDED HONEYCOMB CARDBOARD BLOCKS UNDER THE CABINET**. Hinges on top can cause damage to customers floor. Place cabinet on its back side. Install all casters.

4

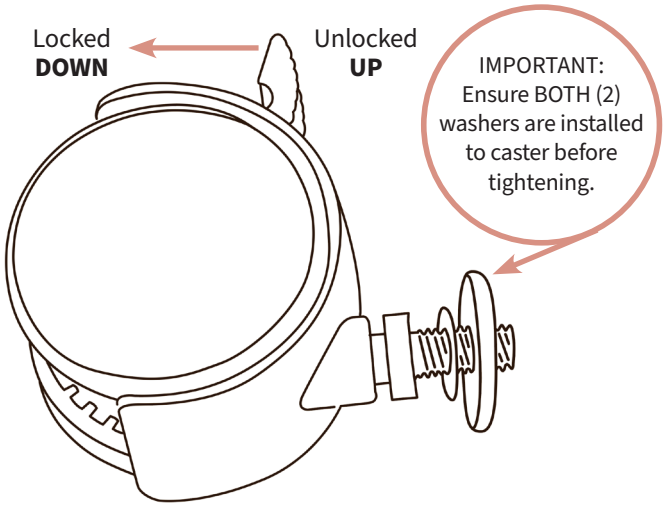

To assemble caster: Place lock washer on first and then flat washer on top of stem of the caster. **Unlock all casters when installing. IMPORTANT: Ensure BOTH washers are installed to caster before tightening.**

5

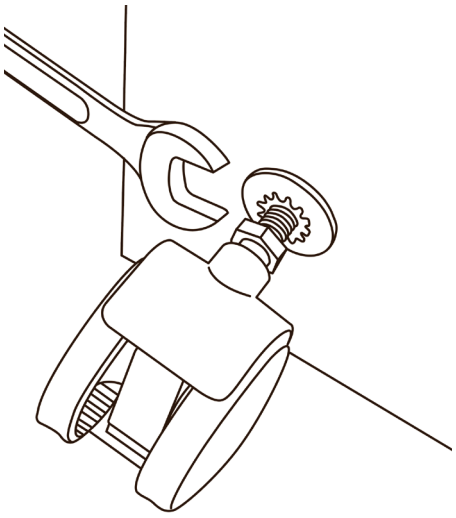

Thread the caster stem into the studio and tighten with 1/2" open-faced wrench. **Tighten until snug. Do not over tighten.**

6

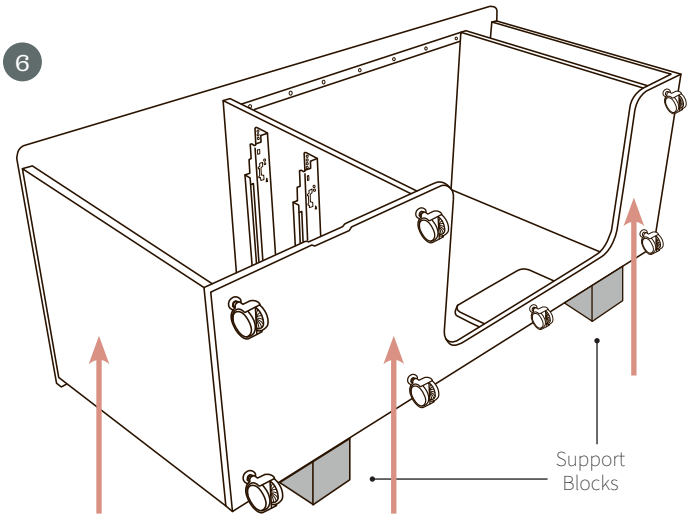

7

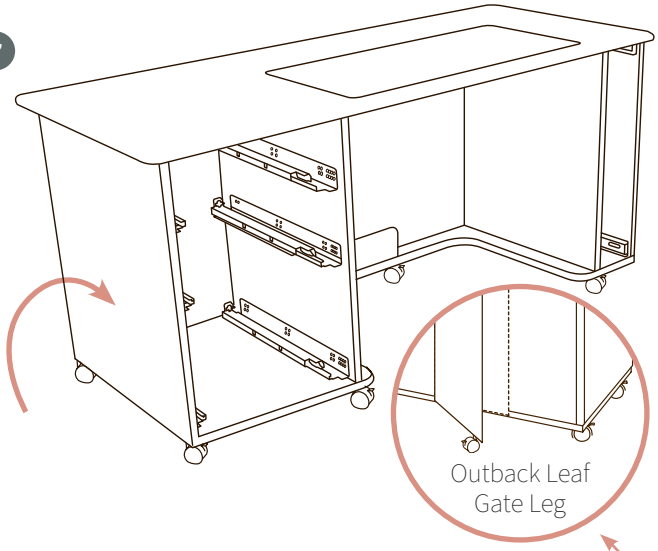

LIFT cabinet core, insert support blocks and **ROTATE** into an upright position, then set studio down on casters.

DO NOT PIVOT ON CASTER WHEELS

Note: If studio has optional outback leaf included, assemble casters to Gate Legs as shown in this step.

Outback Leaf Assembly

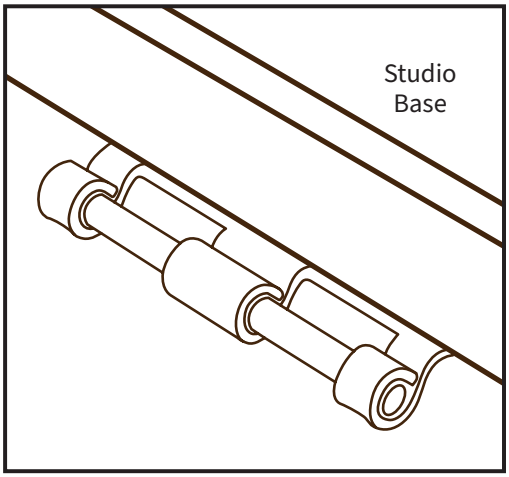

Outback Leaf Gravity Hinge **(Mounted on studio base)**

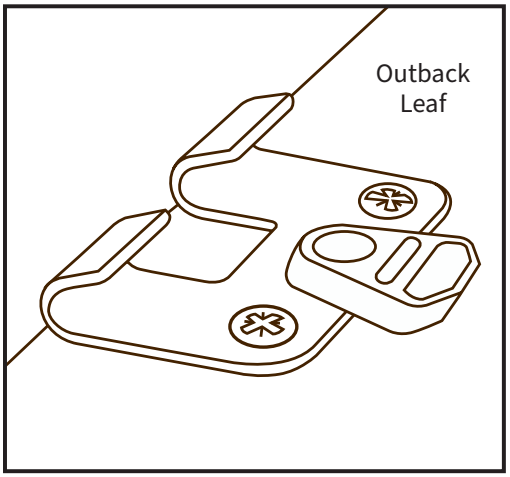

Outback Leaf Gravity Hinge Unlocked **(Mounted on outback leaf)**

8

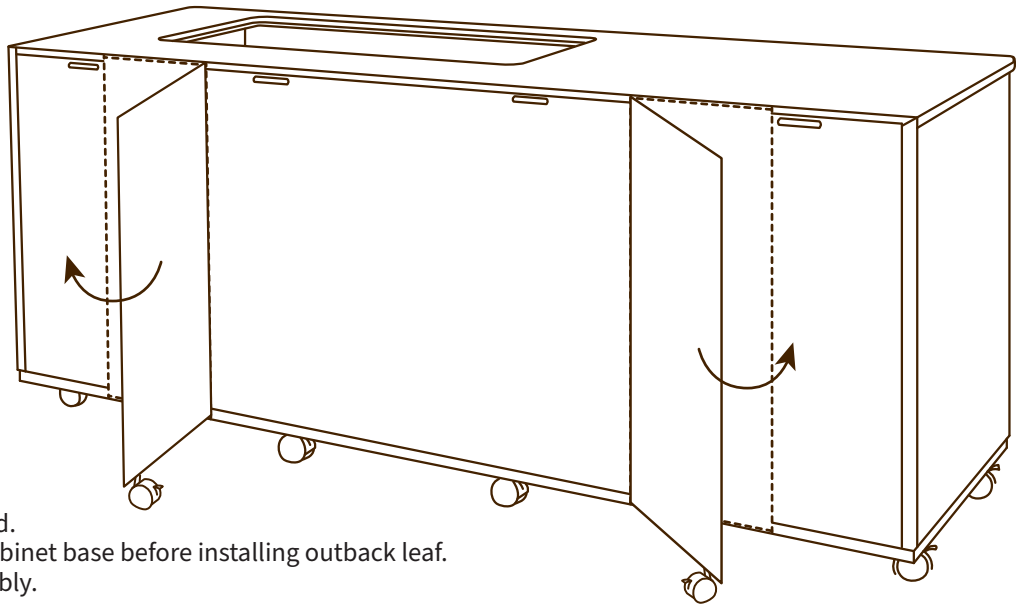

For outback leaf.
Gate legs come attached.
Must fold flat against cabinet base before installing outback leaf.
Caster(s) require assembly.

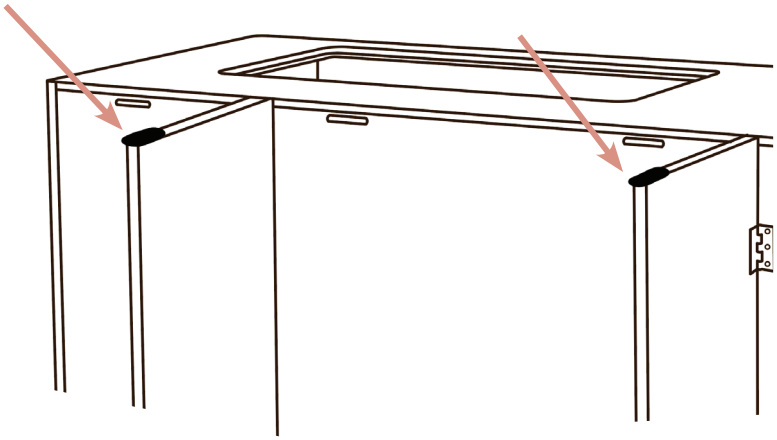

Felt pads are included in hardware packs. This aids in leveling the outback leaf with the main worksurface.

9

Install Outback Leaf
Two People Required

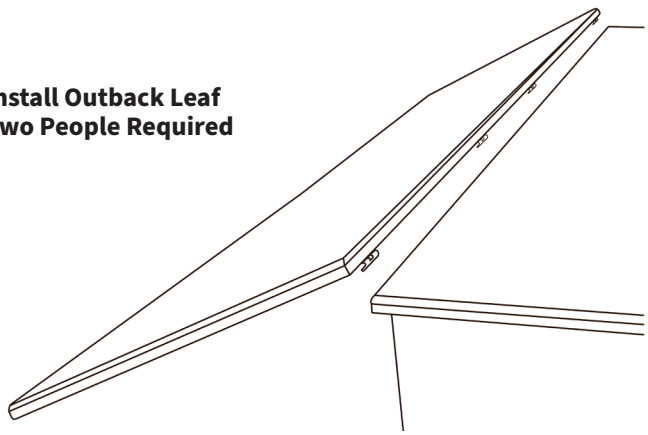

- Leaf has been disassembled for shipping.
- The hinge base has been mounted to the backside of the Studio Top Panel and the hinge hook has been mounted to the Outback Leaf.
- Lower the Outback Leaf into position by setting the hook portion on to the base as shown in view.

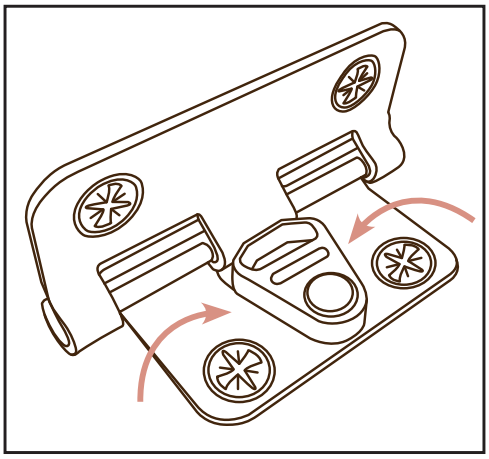

Outback Leaf Gravity Hinge Locked
Lock Hinge After Outback Leaf Installed. 4-5 Locations Total, depending on model.

Koala™

studios

www.koalacabinets.com